DOVER / CALAIS

Instruction Book



LACUNZA®

Lacunza congratulates you on your choice.
Certified under ISO 9001, Lacunza guarantees the quality of its appliances and undertakes to meet the needs of its customers.
Confident of the know-how afforded by more than 50 years' experience, Lacunza uses advanced technologies in the design and manufacture of its entire range of appliances. This document will help you install and use your appliance in optimum conditions for your comfort and safety.

CONTENTS

1. PRESENTATION OF THE APPLIANCE 3
1.1. General characteristics 3
2. INSTRUCTIONS FOR THE INSTALLER 5
2.1. Warning to installers 5
2.2. Room for installation 5
2.2.1. Ventilation of the room 5
2.2.2. Location of the appliance in the room 6
2.3. Installation of the appliance 6
2.3.1. Floor 6
2.3.2. Safety distances 6
2.3.3. Checks before lighting for the first time 6
2.3.4. Height adjustment and levelling the appliance 6
2.3.5. Connection to the flue 6
2.3.6. Turbine-potentiometer connection 6
2.4. Chimney flue 7
2.4.1. Type of flue 7
2.4.2. Chimney crown 8
3. INSTRUCTIONS OF USE 10
3.1. Fuel 10
3.2. Description of the parts of the appliance 11
3.2.1. Operating components 11
3.3. Lighting 12
3.4. Safety 12
3.5. Loading fuel 12
3.6. Operation 12
3.7. Removing ash 13
3.8. Deflectors 13
3.9. Electrical system 14
4. MAINTENANCE AND IMPORTANT ADVICE 15
4.1. Maintenance of the appliance 15
4.1.1. Firebox 15

4.1.2. Inside the appliance 15
4.1.3. Flue socket 15
4.1.4. Painted sheet-steel-cast-iron parts 15
4.1.5. Firebox glass 15
4.2. Maintenance of the chimney flue 16
4.3. Important advice 16
5. TROUBLESHOOTING 17
6. BASIC BREAKDOWNS 18
6.1. Basic breakdowns DOVER 18
6.2. Basic breakdowns CALAIS 20
7. PRODUCT RECYCLING 22
8. DECLARATION OF PERFORMANCE 23
9. CE MARK 25

1. PRESENTATION OF THE APPLIANCE

For optimum operation of the appliance, we advise you to read this manual carefully before switching on the appliance for the first time. In case of problems or concerns, we urge you to contact your dealer, who will cooperate with you.

In order to improve the product, the manufacturer reserves the right to make changes without notice by updating this document.

This appliance is designed to burn wood in absolutely safe conditions.
WARNING: Faulty installation may have serious consequences.
Installation and all necessary regular maintenance operations must be performed by an authorized installer in full accordance with the specifications set out in the legislation applicable in each country and this instruction book.

1.1. General characteristics

		Unit	DOVER / CALAIS
	Operating appliance	-	Intermitente
	Appliance classification	-	Tipo B
	Preferred fuel	-	Madera en tronco (humedad<25%)
	Indirect heating functionality	-	NO
Values at Nominal Output	Nominal output to atmosphere (Direct) (P_{nom})	kW	13
	Efficiency at P_{nom} (η_{nom})	%	83
	CO emission at 13% O_2 at P_{nom} (CO_{nom})	mg/m³	0.05
	NO_x emission at 13% O_2 at P_{nom} (NO_{Xnom})	mg/m³	125
	OGC emission at 13% O_2 at P_{nom} (OGC_{nom})	mg/m³	32
	PM emission at 13% O_2 at P_{nom} (PM_{nom})	mg/m³	29
	Optimum flue draught at P_{nom} (p_{nom})	Pa	12
	Gas temperature of flue at P_{nom} (T_{nom})	°C	251
	Gas temperature on the flue socket flange at P_{nom}	°C	281
	Log load frequency at P_{nom}	h	1
	Gas mass flow at P_{nom}	g/s	9.8
	Wood consumption (beech) at P_{nom}	kg/h	3.7
	Chimney temperature class	-	T400
	Dimensions of the firebox		
	Width	mm	410
	Depth	mm	300
	Useful height	mm	500
	Maximum length of the logs	cm	40
	Volume heated (45W/m³) at P_{nom}	m³	289
	Weight	kg	100
	Flue socket diameter (d_{out})	mm	150
	Voltage (AC)	V	230
	Frequency	Hz	50
	Maximum electricity consumption (el_{max})	kW	0.024

Minimum electricity consumption (el_{min})	kW	0
Auxiliary electricity consumption in standby mode (el_{SB})	kW	0
Type of heat output/room temperature control	Single stage heat output, no room temperature control	
Energy efficiency class	-	A+
Energy efficiency index (EEI)	-	110
Seasonal Energy Efficiency of space heating (η_s)	%	73

Note: The values indicated in the above table are based on tests performed in accordance with UNE-EN 13240 with logs with no more than 18% humidity and pressure conditions as indicated in each case.

Warning: this appliance is designed and prepared to work with the types of fuel, degree of humidity of the fuel, fuel loads, fuel load frequencies, flue draught and system of installation indicated in this Instruction Book. Failure to respect these conditions may lead to problems with the appliance (deterioration, shorter useful life, etc.) which are not covered by the Lacunza warranty.

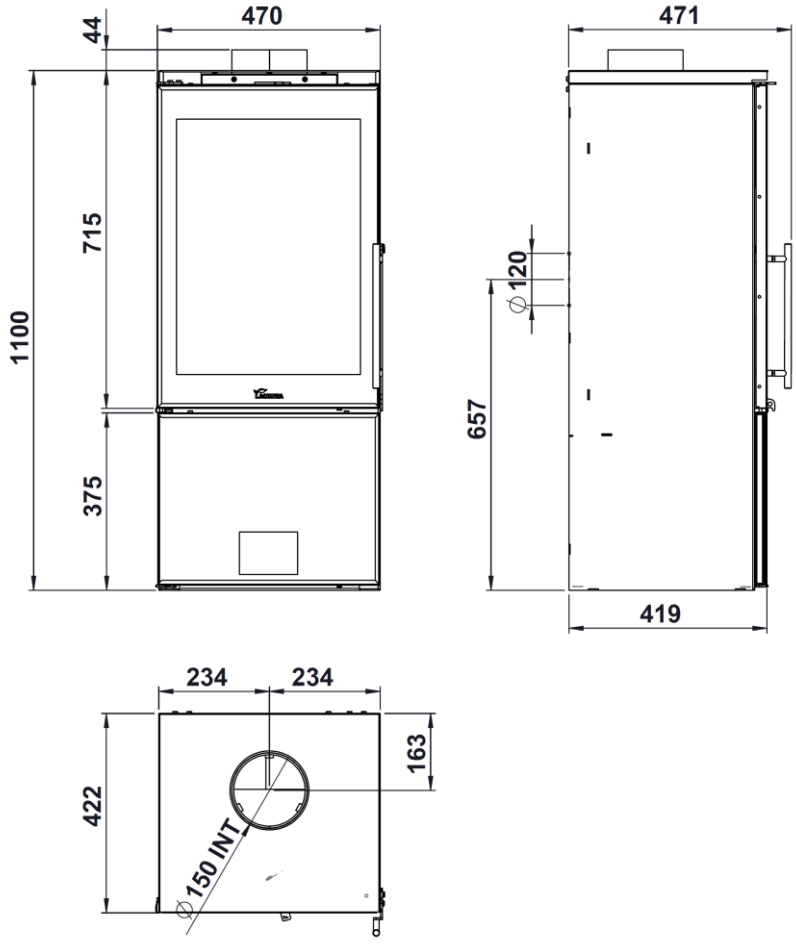

Figure No.1 - Dimensions of the Dover / Calais series in mm

2. INSTRUCTIONS FOR THE INSTALLER

2.1. Warning to installers

All local and national regulations, including all those referring to national and European standards, must be observed when installing the appliance.

Installation of the appliance must be performed by an authorised installer.

An incorrectly installed appliance may lead to serious incidents (fires, creation of harmful gases, deterioration of nearby fixtures, etc.).

Lacunza's liability is limited to the supply of the material and does not include installation of the appliance.

2.2. Room for installation

2.2.1. Ventilation of the room

The appliance needs to consume oxygen (air) in order to work properly. Ensure a suitable air supply in the room in which the appliance is fitted. This quantity of oxygen is additional to the oxygen that we need in order to breathe (air renewal).

In order to ensure the high quality of the air you breathe and to avoid potential accidents resulting from high concentrations of the gases produced by combustion (mainly carbon dioxide and carbon monoxide), it is absolutely crucial to ensure the suitable renewal of the air in the room in which the appliance is fitted.

the room must always have at least two permanent grilles or openings to the exterior in order to renew the air (one for intake and the other for extraction).

For the installation of its appliances, Lacunza recommends an additional section for these openings. One of these two grilles must be situated high up in the room (at less than 30 cm from the ceiling) and the other one low down (at less than 30 cm from the floor). Both grilles must open outdoors in order to renew the air in the room with fresh air.

The air inlet grilles must be positioned so that they cannot be blocked or closed accidentally.

The minimum section that each of these grilles must have depends on the nominal output of the appliance in accordance with the following table:

Output of the appliance (kW)	**Minimum additional section of each of the grilles (cm^2)**
P ≤ 10kW	70
10 < P ≤ 15	90
15 < P ≤ 20	120
20 < P ≤ 25	150
25 < P ≤ 30	180
30 < P ≤ 35	210
P > 35	240

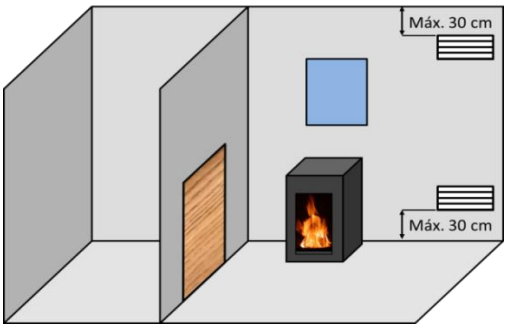

Figure No.2 - Guideline indications for ventilation grilles

In the case of appliances on whick it is posible to pipe combustión air in from outdoors (appliances type BE, BF, CA, CM y CC), the specificatioins described in the table above are not necessary.

The appliance must always be used with the door closed.

In rooms equipped with Controlled Mechanical Ventilation, the system extracts and renews the ambient air; in such cases, the room is at slightly low pressure and it is necessary to install a non-closable outside-air inlet with a section of at least 90 cm^2.

2.2.2. Location of the appliance in the room

Choose a location in the room which favours good hot-air distribution by convection and radiation.

2.3. Installation of the appliance

2.3.1. Floor

Make sure that the base can withstand the total constructed weight of the appliance and its casing.

The apparatus should not be placed on combustible material.

2.3.2. Safety distances

Be sure to respect the appliance installation distances from **combustible materials**. Looking at the appliance head-on:

	Distance to combustible materials (mm)
From the right-hand side	400
From the left-hand side	400
From the rear	300
From the front	1100

Bear in mind that it may even be necessary to protect non-combustible material in order to prevent breakage, deformation, etc., as a result of overheating if the non-combustible material is not designed to withstand high temperatures. A safety distance of 25 cm must be left to isolating materials of type M0.

2.3.3. Checks before lighting for the first time

- Make sure that the glass/es is/are not broken or damaged.
- Make sure that the flueway is not obstructed with packing or loose parts.
- Check the deflectors are correctly positioned.
- Make sure that the airtight joints on the flue circuit are in perfect condition.
- Make sure that the doors close properly.
- Make sure that all moving parts are fitted in place.

2.3.4. Height adjustment and levelling the appliance

The appliance must be perfectly level, horizontally and vertically, both at the front and on the sides (use a spirit level).

2.3.5. Connection to the flue

The appliance must be connected to the chimney flue using special piping designed to resist the products of combustion (e.g. stainless steel, enamelled steel, etc.).

To connect the flue to the socket flange, insert the piping inside the flange and seal the joint with fire sealant or fire cement to make it completely airtight.

The installer must ensure that the pipe connected to the appliance is well secured and there is no chance of it coming free from its housing (e.g. as a result of dilatation due to temperature, etc.).

2.3.6. Turbine-potentiometer connection

These are the connection instructions in order to control the ventilator system using the supplied potentiometer.

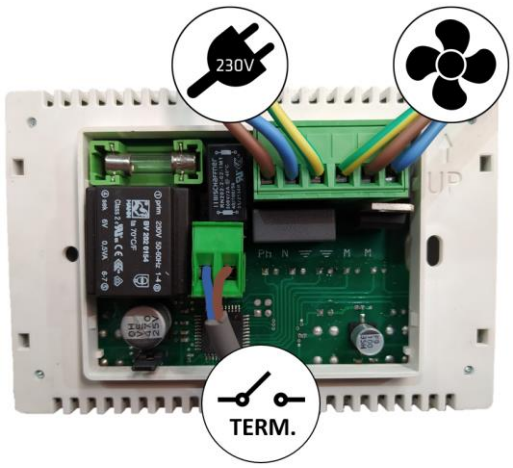

Figure No.1 - Connections to be carried out in the potentiometer

WARNING: the operating temperature of the potentiometer supplied by Lacunza is from 0 to 40°C. Particular care should be taken when choosing where it will be positioned so that it is not damaged by temperatures above 40°C. Insulate the potentiometer correctly so as to avoid this problem.

Read the potentiometer instruction manual.

2.4. Chimney flue

The chimney flue must comply with present standards on the installation of chimneys.

In rooms equipped with Controlled Mechanical Ventilation, the ventilation outlet must never be connected to the flue.

The appliance must always have its own chimney flue, never sharing a chimney flue with another appliance.

2.4.1. Type of flue

The flue must be made of special material designed to resist the products of combustion (e.g. stainless steel, enamelled steel, etc.).

Non-central-heating appliances (without back boiler) require an insulated, double-sleeve flue only on those sections that run outdoors or through cold areas. Single piping can be used inside the building, the heat of the gases serving to heat rooms, insulating only those sections where excess temperature may cause damage.

If the chimney is constructed, then it is necessary to pipe and insulate it to ensure correct updraught.

The diameter of the pipe must be the same as the diameter of the flue socket on the appliance over its entire length in order to ensure correct operation.

The flue must prevent the entry of rainwater.

The flue must be clean and airtight over its entire length.

The flue must be at least 6m tall and the chimney cap must not hinder the free release of gases.

If the flue tends to suffer from downdraught, then it is necessary to fit an effective anti-downdraught cowl, a static cowl or a smoke extraction fan, or reshape the chimney.

Never make 90° bends due to the great loss of draught they cause, and reduce 45° bends down to an absolute minimum. Each 45° bend is equivalent to a 0.5m reduction in flue length. Horizontal flue sections should not be installed because they cut updraught a great deal.

The appliance is designed to operate under controlled draught conditions. The appliance must operate at a chimney draught of between 12Pa and 15Pa. To ensure this draught, an automatic draught moderator must be installed in the flue. Uncontrolled draught operation can lead to quick damage of the appliance, which will not be covered by the warranty.

The flue must not rest its weight on the appliance, as this could damage the worktop.

Bear in mind that high temperatures may be reached in the flue, meaning that it is essential that insulation be enhanced in sections in which combustible material is present (wooden beams, furniture, etc.). It may even be necessary to protect non-combustible material in order to prevent breakage, deformation, etc., as a result of overheating if the material is not designed to withstand high temperatures.

It must be possible to clean the entire flue, no sections being left inaccessible for cleaning purposes.

2.4.2. Chimney crown

The upper end of the chimney must clear the roof, the roof ridge or any obstacle located on the roof by at least 1m.

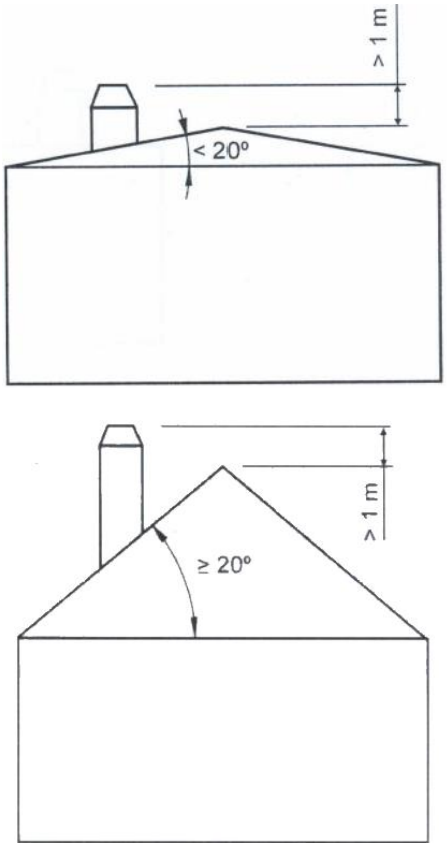

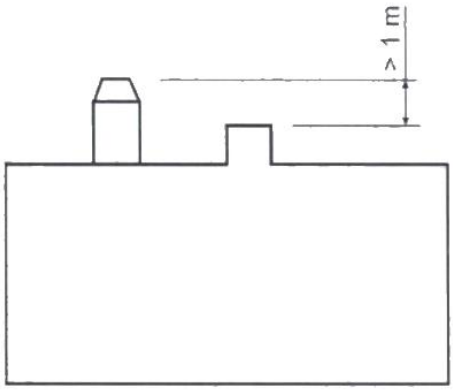

Figure No.2 - Distances between chimney crown and roof ridge

The chimney crown must clear the highest point of any neighbouring building or obstacle located within a 10m radius of the chimney outlet by more than 1m.

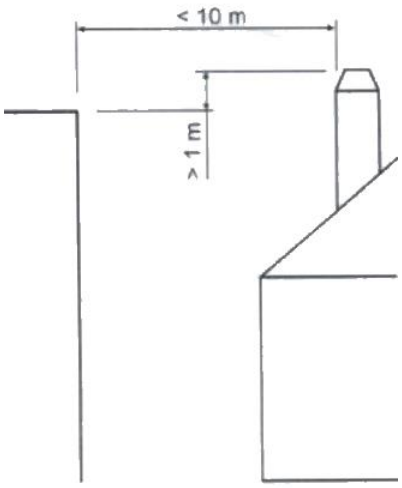

Figure No.3 - Distances between the chimney crown and objects within a 10m radius

The chimney crown must clear any neighbouring building or obstacle located within a radius of 10m to 20m from the chimney outlet.

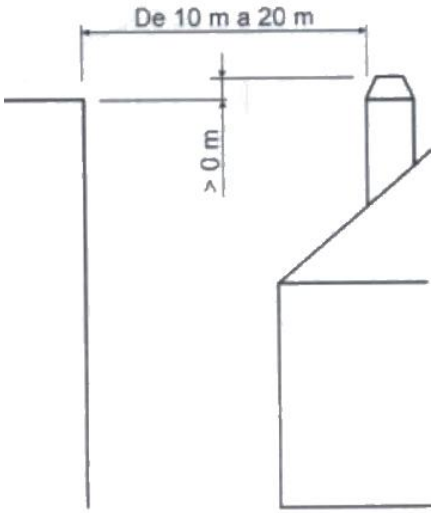

Figure No.4 - Distances between the chimney crown and objects within a radius of between 10 and 20m

3. INSTRUCTIONS OF USE

The manufacturer accepts no liability whatsoever for damage caused to parts as a result of the improper use of non-recommended fuels, modifications made to the appliance or how it is installed. **Only use original replacement parts.**

All local and national regulations, including those referring to national and European standards, must be observed when using the appliance.

Heat is diffused by radiation and convection via the front and exterior of the appliance.

3.1. Fuel

This appliance must not be used as an incinerator. Do not use non-recommended fuels.

- Use dry logs (max. 16% humidity), cut at least 2 years ago, clean of resin and stored in a sheltered, ventilated place.
- Use hard woods with high calorie values and good ember production.
- Large logs should be cut to useable lengths before being stored. The logs should have a maximum diameter of 150mm.
- Finely-chopped wood produces greater heat output, but also burns more quickly.

Optimum fuels:

- Beech.

Other fuels:

- Oak, chestnut, ash, maple, birch, elm, etc.
- Pine and eucalyptus logs are low density and produce very long flames, and may cause the parts of the appliance to wear out more quickly than normal.
- Resinous wood may mean that the appliance and the flue need to be cleaned more often.

Non-permitted fuels:

- All types of coal and liquid fuel.
- "Green wood". Green or damp wood reduces the performance of the appliance and leads to soot and tar build-up on the inner walls of the flue, obstructing it.
- "Recovered wood". The burning of treated woods (railway sleepers, telegraph posts, plywood, fibreboard, pallets, etc.) quickly blocks the system (soot and tar build-up), harms the environment (pollution, smells) and may lead to deformation of the firebox due to overheating.
- All materials which are not wood (plastic, spray cans, etc.).
- Never use gasoline, gasoline-type lamp fuel, paraffin, charcoal lighter fluid, ethyl alcohol or similar liquids to ignite or rekindle a fire in the equipment. Keep all such liquids away from the equipment while it is in use.

Green and reprocessed wood may cause chimney fires.

The graph below shows how the humidity of firewood affects its heat output:

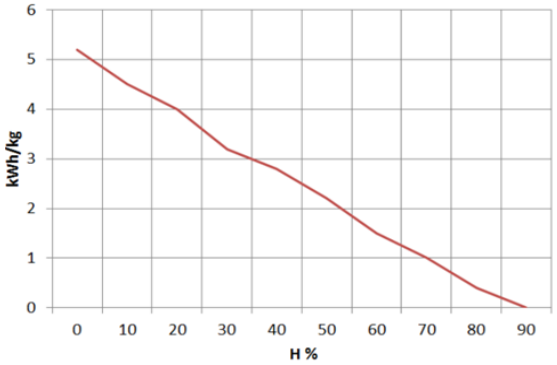

Figure No.5 - Relationship between firewood humidity and heat output.

3.2. Description of the parts of the appliance

3.2.1. Operating components

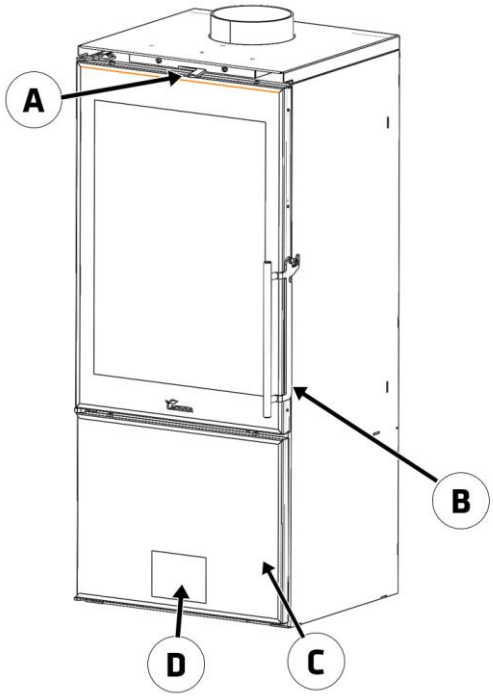

Figure No.6 - Operating components on the appliance

- A: Secondary air intake
  - A1 open (right)
  - A2 closed (left)
- B: Firebox door handle
- C: Handle of the lower door
- D: Potentiometer

3.3. Lighting

Use of the appliance in warm weather (warm days, early hours of the afternoon on sunny days) may lead to lighting and updraught problems.

Certain weather conditions, such as fog, ice, humidity entering the flue, etc., may hinder sufficient updraught in the flue and lead to suffocation.

Proceed as follows in order to light the appliance satisfactorily:

- Open the firebox door(s) and open all the firebox air-intake inlets to the full.
- Place paper or a firelighter and some wood chips in the firebox.
- Light the paper or firelighter.
- Leave the door slightly ajar, the width of two or three fingers, for about 15 minutes until the glass warms up.
- The first time the appliance is lit, the fire should be gentle to allow the parts of the appliance to dilate and dry.

Important: The first time it is lit up, the appliance may give off smoke and strange smells. This is not a cause for concern. Open an outdoor window to ventilate the room during the first few hours of operation.

If you notice water around the appliance, this is produced by the condensation of the moisture in the wood on lighting the fire. This condensation will no longer appear when the appliance has been lit three or four times and has adapted to its flue. If it does not disappear, then check the flue draught (length and diameter of the flue, flue insulation, airtightness) and the humidity of the wood used.

3.4. Safety

Do not store combustible materials beneath the appliance.

3.5. Loading fuel

In order to load firewood, open the firebox door gently, preventing the sudden entry of air to the firebox so that smoke does not enter the room that the appliance is installed in.

Perform this operation with the glove to prevent burns to the hands.

The maximum height of the load shall be approximately one third of the height of the firebox.

The minimum interval between loads for nominal heat output is 60 minutes.

Always load with the nominal amount (see table in section 1.1).

For minimum burning (e.g. at night), use thicker logs.

When the firebox is loaded, close the door.

Be careful when placing logs in the firebox on appliances with vermiculite interiors. Vermiculite is a fragile material and may crack if knocked. The use of wood with non-recommended humidity levels will quickly damage the vermiculite parts.

3.6. Operation

The appliance should be operated with the door closed.

For safety reasons, never close all the appliance's combustion-air intakes.

Secondary-air intake

By opening this inlet, air enters the firebox via the top of the firebox door.

IMPORTANT: Keeping the secondary-air intake open helps keep the door glass cleaner for longer.

Air intake

By opening this inlet, air enters the combustion flame, making for more efficient and less polluting combustion because post-combustion takes place, burning the particles which were not burned in the first combustion. This increases the performance of the appliance and reduces emissions.

IMPORTANT: The appliance is exposed to extreme changes in temperature and may, as a result, make noises when in operation. These noises are a natural result of expansion/contraction of the parts which make up the appliance. Do not be alarmed by noises of this kind.

In order to obtain maximum output, open all the air intake to the firebox and in order to obtain minimum output, tend towards closing them. For normal use, we recommend you leave the Secondary Intakes open 40%.

In class B or BE appliances (without combustion air ducting from the street), when the appliance is not in use, the appliance-flue duct assembly may represent a heat leakage route to the street. When the appliance is not in use, it is advisable to leave the air inlet registers to the combustion chamber closed to minimise these energy losses.

3.7. Removing ash

Following sustained use of the appliance, it is necessary to remove the ash from the firebox. Remove the ashpit box when cold or using something to prevent yourself from getting burned (glove).

Never throw hot embers into the rubbish.

Access the ashpit by opening the door on the appliance.

3.8. Deflectors

The appliance has vermiculite deflectors with a steel reinforcement that joins them together and another steel deflector above the vermiculite.

Dismantling the deflector

First extract the reinforcement. In order to do this, draw it towards the front of the appliance to release it from the vermiculite parts.



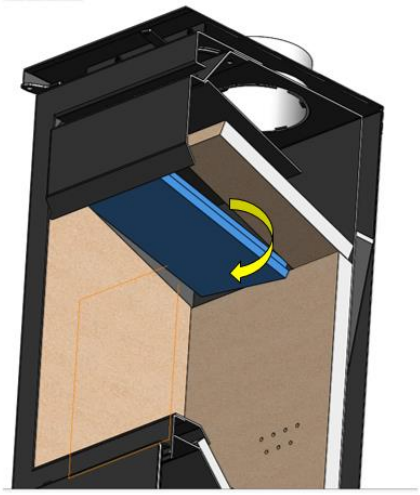

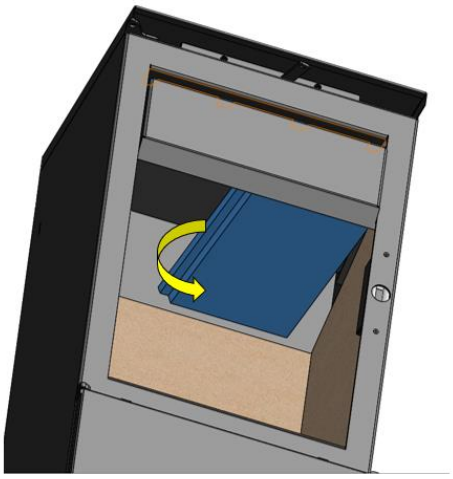

Figure No.7 - Extracting the vermiculite deflectors

The vermiculite deflectors can then be extracted as shown:

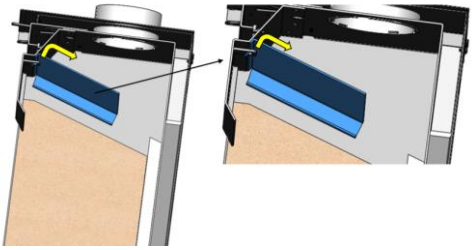

Figure No.8 - Turn and remove the upper Steel deflector

3.9. Electrical system

Forced convetion. Fans

Dover models have 1 double fan for the forced convection of the hot air generated around the appliance inside the shell. This air can be piped to other rooms.

IMPORTANT: This appliance is not covered by our warranty unless directly connected to the mains electricity supply in accordance with the conditions described in the relevant section in 1.1.

Potentiometer operation:

By means of its rotating lever, the potentiometer controls the flow of hot-air output from the appliance in two ways:

- **Operation:**

The fan automatically or manually starts working at the set speed. When the fan is working automatically (recommended), when a fire has been lit in the firebox and the thermostat reaches a temperature of approximately 50°C, the fan starts working at the power set on the potentiometer (rotating wheel) and stops automatically when the temperature drops beneath 50°C.

In addition, we have the option of stopping the turbines from the Stop button, whenever we want.



The potentiometer has a remote control, which allows the same operations as the potentiometer.

The remote control of some TV brands may interfere with the potentiometer sensor and change its operation. To avoid possible interference, it is recommended to place the potentiometer in a place away from the TV.

For more information see the potentiometer instruction manual.

4. MAINTENANCE AND IMPORTANT ADVICE

4.1. Maintenance of the appliance

The appliance, the flue connector piping and the flue must be cleaned regularly, particularly following long periods without use.

4.1.1. Firebox

Clean the firebox area of ash, etc.

4.1.2. Inside the appliance

Clean the firebox area of ash. Clean the deflectors, where soot may build up.

4.1.3. Flue socket

The flue socket area must be kept clean at all times for the appliance to work properly.

It must be cleaned as often as required. How often it is cleaned depends on how much the appliance is used and the type of fuel employed.

4.1.4. Painted sheet-steel-cast-iron parts.

These parts should be cleaned with a brush or dry cloth. Do not dampen the parts: the steel could rust and the paint could blister and chip. Be particularly careful when cleaning the glass: the liquids used must not dampen the painted steel.

4.1.5. Firebox glass

To keep the glass as clean as possible for as long as possible, the secondary air register should be kept open. However, over the hours of use, the glass may become dirty. To clean it, we will use specific degreasing products or dry cleaning products for this task.

The cleaning should be carried out with the glass cold and taking care not to apply the glass cleaner directly on the glass as, if it comes into contact with the door's closing cord, it may deteriorate. Put the cleaning product on the cloth.

Attention, never let the product drip into the lower part of the glass. The accumulation of the cleaning product, with soot or ash residues, can damage the screen printing on the glass.

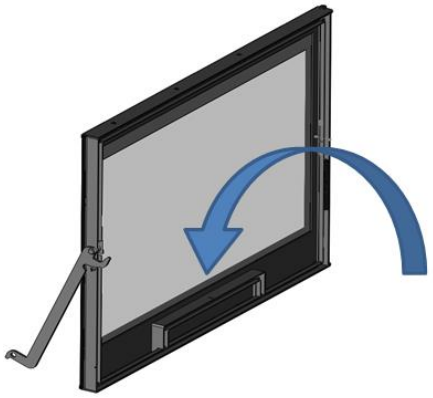

Note: If we use the appliance in draught conditions higher than 15Pa or burn more wood (per hour) than those indicated in table 1.1, we will subject the appliance to working conditions higher than those designed for it. This can lead to aggressive fouling of the glass (white halo), which cannot be cleaned by the traditional method.

Caution, the vitro ceramic glass is prepared to support 700°C. Never let burning woods or combustion flame beating against the glass for prolonged periods of time. In this case, the glass would be submit to temperatures above 750°C, this could change the internal structure of the glass and make it opaque (irreversible phenomenon).

4.2. Maintenance of the chimney flue

VERY IMPORTANT: In order to avoid incidents (chimney fires, etc.), it is necessary to perform maintenance and cleaning operations on a regular basis; if the appliance is used often, then the chimney and the flue connector piping must be swept several times a year.

In the event of fire in the chimney, close the flue draught, close doors and windows, remove embers from the firebox, block the connection hole with damp cloths and call the fire brigade.

4.3. Important advice

Lacunza recommends that only Lacunza-authorised replacement parts be used.

Lacunza accepts no liability for any modification to the product which it has not authorised.

This appliance is a heat-producing appliance and contact may lead to burns.

This appliance may remain HOT for a period of time after it has gone out. MAKE SURE THAT SMALL CHILDREN DO NOT GO NEAR IT.

5. TROUBLESHOOTING

 This symbol means that a qualified professional should be called to perform the operation.

Problem	Probable causes		Solution
The fire does not light properly **The fire does not stay alight**	Green or damp wood		Use hard woods, cut at least 2 years ago and stored in a sheltered, ventilated place
	The logs are too large		Use crumpled paper or firelighters and dry wood chips to light the fire. Use split logs to keep the fire going
	Poor-quality wood		Use hard woods which produce heat and embers (chestnut, ash, maple, birch, elm, beech, etc.)
	Insufficient primary air		Open the primary- and secondary-air intakes completely, or even open the door slightly. Open the outdoor-air inlet grille
	Insufficient updraught		Check that the draught is not blocked. De-soot if necessary. Check that the flue is in perfect condition (airtight, insulated, dry, etc.)
The fire flames up too much	Excessive primary air		Close the primary- and secondary-air intakes partially or totally
	Excessive updraught		Install a draught damper
Smoke given off on lighting	Poor-quality wood		Do not continually burn chips, carpentry scraps (plywood, pallets, etc.)
	Cold flue		Heat up the flue by burning a piece of paper in the firebox.
Smoke during burning	The room is at low pressure		In rooms with Controlled Mechanical Ventilation, leave an outdoor window ajar until the fire is fully alight.
	Too little wood loaded		Load as recommended. Loads notably smaller than those recommended lead to low smoke temperature and downdraught.
	Insufficient updraught		Check the condition of the flue and insulation. Check that the piping is not blocked. Clean mechanically if necessary
	Wind enters the flue		Install an anti-downdraught system (Cowl) at the top of the chimney
Does not warm up enough	The room is at low pressure		In rooms with Controlled Mechanical Ventilation, there must be an outdoor-air inlet
	Poor-quality wood		Only use the recommended fuel
Water condenses (after the appliance has been lit more than 3 or 4 times)	Too little wood loaded		Load as recommended. Loads notably smaller than those recommended lead to low smoke temperature and condensation.
	Green or damp wood		Use hard woods, cut at least 2 years ago and stored in a sheltered, ventilated place.
	Condition of the flue		Lengthen the flue (5-6 metres minimum). Insulate the flue properly. Check the airtightness of the flue/appliance.

6. BASIC BREAKDOWNS

6.1. Basic breakdowns DOVER

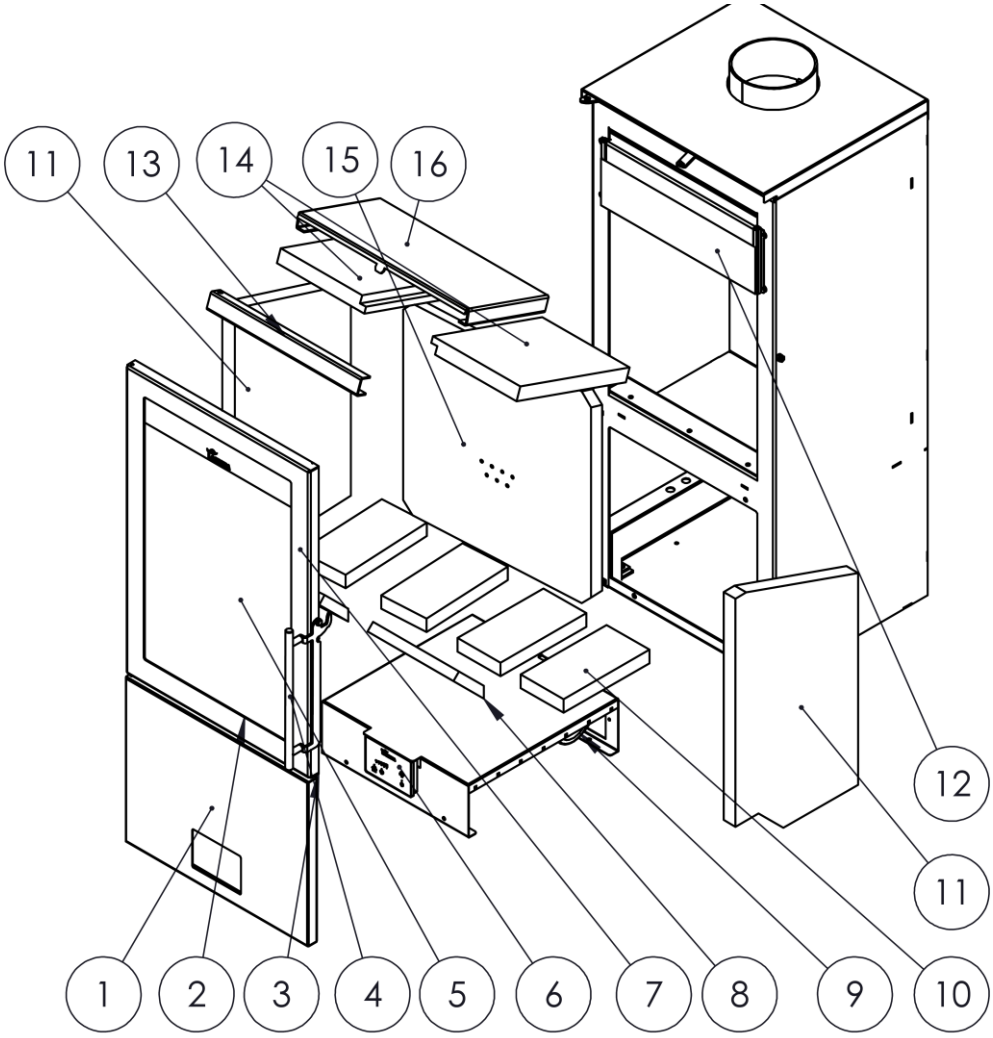

	Referencia	Denominación	Cantidad
1	5021110004	Puerta cajón leñero Dover Completa	1
2	500000000510	Cordón plano pelos 8x2mm	3
3	509020000042	Cordón Negro Ø13mm	3
4	504000000067	Manilla Inox ITACA	1
5	504080000001	Iranzu cristal hogar	1
6	5040000928	Potenciómetro ELX AIR SC21	1
7	5021110008	Puerta hogar DOVER completa s/cristal	1
8	504080000008	Iranzu ladrillo refractario base biselado	2
9	5045500003	SIENA 800 Subc Ventilador DOBLE	1
10	502050000014	Levante base ladrillo 220x110x30	4
11	5021110005	Vermiculita lateral izdo dcho. Dover Calais	1
12	5021110007	Cristal salida de aire secundario CALAIS	1
13	5000000944	Refuerzo deflector	1
14	5040800435	Dover Calais Deflector vermiculita(unid)	2
15	5021110006	Vermiculita trasera Dover Calais	1
16	5040800434	Dover Calais Deflector superior	1

6.2. Basic breakdowns CALAIS

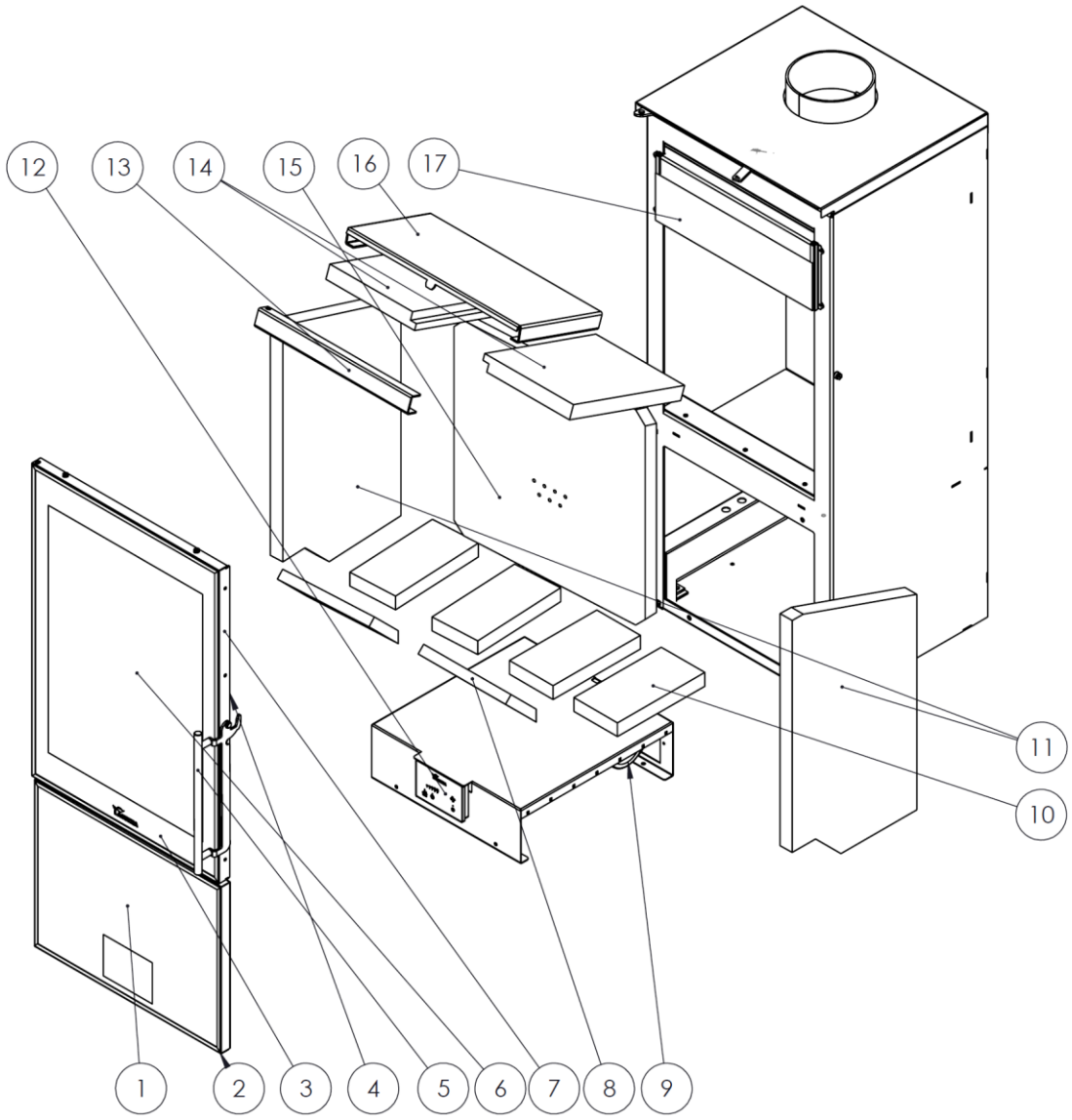

	Referencia	Denominación	Cantidad
1	5021110000	Cristal cajón leñero Calais C/JUNTA	1
2	5021110001	Puerta cajón leñero Calais Completa	1
3	500000000510	Cordón plano pelos 8x2mm	3
4	509020000042	Cordón Negro Ø13mm	3
5	504000000067	Manilla Inox ITACA	1
6	5021110002	Cristal puerta hogar Calais C/JUNTA	1
7	5021110003	Puerta hogar Calais completa s/cristal	1
8	504080000008	Iranzu ladrillo refractario base biselado	2
9	5045500003	SIENA 800 Subc Ventilador DOBLE	1
10	502050000014	Levante base ladrillo 220x110x30	4
11	5021110005	Vermiculita lateral dcho. Izdo. Dover Calais	1
12	5040000928	Potenciómetro ELX AIR SC21	1
13	5000000944	Refuerzo deflector	1
14	5040800435	Dover Calais Deflector vermiculita(unid)	2
15	5021110006	Vermiculita trasera Dover Calais	1
16	5040800434	Dover Calais Deflector superior	1
17	5021110007	Cristal salida de aire secundario CALAIS	1

7. PRODUCT RECYCLING

The recycling of the appliance is the exclusive responsibility of the owner, who must act in compliance with the laws in force in his country regarding safety, respect and protection of the environment. At the end of its useful life, the product must not be disposed of with urban waste.

It can be delivered to the specific selective collection centers set up by the municipalities, or to retailers who offer this service. The selective disposal of the product avoids possible negative consequences for the environment and for health and makes it possible to recover the materials of which it is composed, thus obtaining significant savings in terms of energy and resources.

It can be disassembled (the parts are assembled with screws or rivets) and the components can be deposited in their corresponding recycling channels. The components of the appliance are: steel, cast iron, glass, insulating materials, electrical material, etc.

8. DECLARATION OF PERFORMANCE

ES-S-050

DECLARACIÓN DE PRESTACIONES Conforme al R. E. Productos Construcción (UE) Nº 305/2011
DÉCLARATION DE PERFORMANCE Selon le Réglement (UE) Nº 305/2011
DICHIARAZIONE DI PRESTAZIONE In base al Regolamento (UE) Nº 305/2011
DECLARATION OF PERFORMANCE According to Regulation (UE) Nº 305/2011
DECLARAÇAO DE PRESTAÇÕES Em base com o Regulamento (UE) Nº 305/2011
LEISTUNGSERKLÄRUNG Gemäß R. E. Bauprodukte (EU) Nr. 305/2011

1. Nombre y/o código de identificación única del producto:
   Nom-code d'identification unique du produit:
   Nome-codice identificativo unico del prodotto:
   Unique identifier nome-code for product:
   Nome-código de identificaçao único do produto:
   Name und/oder eindeutiger Identifikationscode des Produkts:
   - Marca, marque, marca, mark, marca, markierung: **Lacunza**
   - Tipo, type, tipo, type, tipo, nett: **Estufa, Poêle, Stufa, Stove, Aquecedor, Holzofen**
   - Modelo, modèle, modello, model, modelo, modell: **DOVER, CALAIS**

2. **Uso o usos previstos del producto:** Estufa de carga manual, para quemar combustibles sólidos (indicado en instrucciones), cuya función es calentar el espacio en el que está instalada.
   Utilisation prévue du produit: Poêle qui se charge manuellement, conçu pour brûler des combustibles solides (indiqués dans le Manuel d'Instructions), dont la fonction est de chauffer l'espace où il est installé.
   Usi previsti del prodotto: Stufa a carico manuale, per bruciare combustibili solidi (indicati nelle istruzioni), la cui funzione è riscaldare lo spazio in cui è installato.
   Entended uses of the product: Stove to be loaded by hand and designed to burn solid fuels (indicated in instructions), whose function is to heat the space in which it is installed.
   Utilização prevista do produto: Aquecedor de carga manual, para queimar combustíveis sólidos (indicado nas instruções), cuja função é aquecer o espaço no qual está instalado.
   Vorgesehene Verwendung oder Verwendungen des Produkts: Handbeschickungsofen zum Verbrennen von festen Brennstoffen (in der Anleitung angegeben), deren Funktion darin besteht, den Raum zu beheizen, in dem er installiert ist.

3. Nombre y dirección del fabricante:
   Nom et adresse du fabricant:
   Nome e indirizzo del fabbricante:
   Name and adress of the manufacturer:
   Nome e endereço do fabricante:
   Name und Anschrift des Herstellers:

   LACUNZA KALOR GROUP S.A.L.
   Pol. Ind. Ibarrea 5A 31800 Alsasua (Navarra) (España)
   Télefono: (0034) 948563511
   Fax: (0034) 948563505
   Email: comercial@lacunza.net

4. Sistema de evaluación y verificación de la constancia de las prestaciones: **3**
   Système d'évaluation et contrôle de la constante de performance: **3**
   Sistema di valutazione e verifica della costanza della prestazione: **3**
   Assessment and verification system for constancy of performance: **3**
   Sistema de avaliação e verificação da regularidade do desempenho: **3**
   System zur Bewertung und Überprüfung der Leistungsbeständigkeit: **3**

5. Organismo Notificado, Laboratoire notifié, Laboratorio notificato, Laboratory notified, Laboratório notificado, Gemeldeter Organismus:
   STROJÍRENSKÝ ZKUŠEBNÍ ÚSTAV, S.P.
   Engineering Test Institute, Public Enterprise
   Hudcova 424/56b, 621 00 Brno, Czech Republic. Notified Body 1015
   Por el sistema, Selon le system, In base al system, Based on system, Em base ao system, vom System: **3.**
   Documento emitido (fecha), Numéro du rapport d'essai (date), Numero rapporto di prova (data), Test report number (date), Número relação de prova (data), Ausgestelltes Dokument (Datum): **CPR-B-01759-22 (8-11-2022)**

6. Prestaciones declaradas, Performance déclarée, Prestazioni dichiarate, Services declare, Desempenhos declarados, Deklarierte Vorteile:

Especificaciones técnicas armonizadas, Spécifications techniques armonices, Specifica tecnica armonizzata, Harmonised technical specifications, Específica técnica harmonizada, Harmonisierte technische Spezifikationen EN-13240:2001/A2:2004/AC:2006/AC:2007		
Características esenciales, Caractéristiques essentielles, Caratteristiche essenziali, Essential features, Características essenciais, Unerlässliche Eigenschaften	**Prestaciones, Performance, Prestazione, Services, Desempenho, Leistungen**	
Reacción al fuego, Resístance au feu, Resistenza al fuoco, Resistance to fire, Resístênza ao fogo, Reaktion auf Feuer	**Cumple, Conforme, Conforme, Compliant, Em Conformidade, Gemäß**	
Distancia mínima de seguridad a materiales combustibles, Distance minimum aux matériaux combustibles, Dintanza minima da materiali combustibili, Minimum distance from combustible material, Distãncia mínimo de materiais combustíveis, Mindestsicherheitsabstand zu brennbaren Materialien	**Izquierda, gauche, sinistra, left, esquerda, links :** **Derecha, droite, diritto, right, direito, rechts:** **Trasera, arrière, retro, back, traseira, rückseite:** **Delantera, avant, fronte, front, frente, vorne:** **Encimera, dessus, sopra, above, acima, arbeitsplatte:**	**400mm** **400mm** **300mm** **1100mm** **1000mm**
Temperatura humos a potencia térmica nominal, Température des fumées, Temperatura fumi, Fume temperatura, Temperatura dos gases de combustão, Rauchtemperatur bei Nennwärmeleistung	**251 ºC**	
Emisión, Emission, Emissione, Emissão, Emission, Ausgabe CO 13% O2	**0,05 %**	
Emisión, Emission, Emissione, Emissão, Emission, Ausgabe CO 13% O2	**622 mg/Nm³**	
Emisión, Emission, Emissione, Emissão, Emission, Ausgabe NOx 13% O2	**125 mg/Nm³**	
Emisión, Emission, Emissione, Emissão, Emission, Ausgabe OGC 13% O2	**32 mg/Nm³**	
Emisión, Emission, Emissione, Emissão, Emission, Ausgabe PM 13% O2	**29 mg/Nm³**	
Desprendimiento de sustancias peligrosas, Rejet de substances dangereuses, Rilascio di sostanze pericolose, Release of hazardous substances, Lançamento de substâncias perigosas, Freisetzung von Gefahrstoffen	**Cumple, Conforme, Conforme, Compliant, Em Conformidade, Gemäß**	
Temperatura superficial, Température de surface, Temperatura superficiale, Surface temperatura, Temperatura superficial, Oberflächentemperatur	**Cumple, Conforme, Conforme, Compliant, Em Conformidade, Gemäß**	
Seguridad eléctrica, Sécurité électrique, Sicurezza elettrica, Electrical safety, Segurança elétrica, elektrische Sicherheit	-	
Presión máxima de servicio (paila), Pression maximale de service, Máxima pressione di esercizio, Maximun operating pressure, Máxima pressão de exercicio, Maximaler Arbeitsdruck (Pfanne)	-	
Resistencia mecánica (para soportar una chimenea/un conducto de humos), Resístanse mécanique (pour souvenir la cheminée), Resistenza mecánica (per supportare il camino), Mechanical strength (to support the fireplace), Resistëncia mecãnica (para suportar a chaminé), Mechanischer Widerstand (zur Unterstützung eines Schornsteins/Abzugs)	**Cumple, Conforme, Conforme, Compliant, Em Conformidade, Gemäß**	
Potencia térmica ambiente, Puissance rendue au milieu, Potenza resa all'ambiente, Power output to the environment, Potência libertada no ambiente, Umgebungswärmeleistung	**13 kW**	
Potencia térmica agua, Puissance rendue à l'eau, Potenza ceduta all'acqua, Power transferred to wáter, Potência cedida à agua, Thermalkraft Wasser	-	
Rendimiento energético, Rendement, Rendimento, Efficiency, Atuação, Energieeffizienz	**83 %**	

Las prestaciones del producto identificado en el punto 1 son conformes con las prestaciones declaradas en el punto 6.
La performance du produit citée au point 1 est conforme à la performance declare au point 6.
La prestazione del prodotto di cui ai punti 1 è conforme alla prestazione dichiarata di cui al punto 6.
The performance of the product referred to in point 1 is consistent with the declared performance in point 6.
As declarações do produto identificado no ponto 1, estão conformes com as prestações declaradas no ponto 6.
Die Leistung des in Nummer 1 genannten Produkts entspricht der in Nummer 6 angegebenen Leistung.

La presente declaración de prestaciones se emite bajo la única responsabilidad del fabricante, indicado en el punto 3.
Cette déclaration de performance est délivrée sous la responsabilité exclusive du fabricant cité au point 3.
Si rilascia la presente dichiarazione di prestazione sotto la responsabilità exclusiva del fabricante di cui al punto 3.
This declaration of performance is issued under the manufacturer's sole responsibility referred to in point 3.
É emitida a presente declaraçao de desempenho sob a responsabilidade exclusive do fabricante referido no ponto 3.
Diese Leistungserklärung wird in alleiniger Verantwortung des Herstellers ausgestellt, wie in Punkt 3 angegeben.

LACUNZA
Lacunza Kalor Group S.A.L.
NIF A-31606332
Polígono Industrial Ibarreta s/n
31800 Alsasua [Navarra] Spain

José Julián Garciandía Pellejero
Director Gerente

Alsasua 15-12-2022

9. CE MARK

CE 22	LACUNZA KALOR GROUP S.A.L. Pol. Ind. Ibarrea 5A 31800 Alsasua (Navarra) (Spain)
	Número, Nombre, Numero, Number, Número, Nummer: **ES-S-050**
Marca, marque, marca, mark, marca, markierung: **Lacunza** Tipo, type, tipo, type, tipo, nett: **Estufa, Poêle, Stufa, Stove, Aquecedor, Holzofen** Modelo, modèle, modello, model, modelo, modell: **DOVER-CALAIS**	Organismo notificado, Laboratoire notifié, Laboratorio notificato, Laboratory notified, Laboratorio notificado, Notifizierter Organismus: **SZU Nº1015**
Aparato Tipo, Type d'appareil, Tipo di apparecchio, Apparatus Type, Tipo de aparelho, Gerätetyp: **BE**	
Estufa de carga manual, para quemar combustibles sólidos (indicado en instrucciones), cuya función es calentar el espacio en el que está instalada. Funcionamiento Intermitente. Para conducto humos no compartido. Poêle qui se charge manuellement, conçu pour brûler des combustibles solides (indiqués dans Manuel d'Instructions), dont la fonction est de chauffer l'espace où il est installé. Fonctionnement intermittent. Pour conduit non partagé. Stufa a carico manuale, per bruciare combustibili solidi (indicati nelle istruzioni), la cui funzione è riscaldare lo spazio in cui è installato. Funzionamento intermittente. Per condotto non condiviso. Stove to be loaded by hand and designed to burn solid fuels (indicated in instructions), whose function is to heat the space in which it is installed. Intermittent operation. For non-shared conduit. Aquecedor de carga manual, para queimar combustíveis sólidos (indicado nas instruções), cuja função é aquecer o espaço no qual está instalado. Operação intermitente. Para conduíte não compartilhado. Manueller Beschickungsofen zum Verbrennen von festen Brennstoffen (in der Anleitung angegeben), dessen Funktion darin besteht, den Raum zu erwärmen, in dem er installiert ist. Intermittierender Betrieb. Für nicht geteilten Rauchkanal.	
EN13240:2001/A2:2004/AC:2007	
Características esenciales, Caractéristiques essentielles, Caratteristiche essenziali, Essential features, Características essenciais, unerlässliche Eigenschaften	**Prestaciones, Performance, Prestazione, Services, Desempenho, Leistungen**
Reacción al fuego, Resistance au feu, Resistenza al fuoco, Resistance to fire, Resistência ao fogo, Reaktion auf Feuer	**Cumple, Conforme, Conforme, Compliant, Em Conformidade, Gemäß**
Distancia mínima de seguridad a materiales combustibles, Distance minimum aux matériaux combustibles, Dintanza minima da materiali combustibili, Minimum distance from combustible material, Distância mínimo de materiais combustíveis, Mindestsicherheitsabstand zu brennbaren Materialien	**Izquierda, gauche, sinistra, left, esquerda, links: 400mm** **Derecha, droite, diritto, right, direito, rechts: 400mm** **Trasera, arrière, retro, back, traseira, rückseite: 300mm** **Delantera, avant, fronte, front, frente, vorne: 1100mm** **Encimera, dessus, sopra, above, acima, arbeitsplatte: 1000mm**
Temperatura humos a potencia térmica nominal, Température des fumées, Temperatura fumi, Fume temperatura, Temperatura dos gases de combustão, Rauchtemperatur bei Nennwärmeleistung	**251 ºC**
Emisión, Emission, Emissione, Emissão, Emission, Ausgabe CO 13% O2	**0,05 %**
Emisión, Emission, Emissione, Emissão, Emission Ausgabe, CO 13% O2	**622 mg/Nm³**
Emisión, Emission, Emissione, Emissão, Emission, Ausgabe NOx 13% O2	**125 mg/Nm³**
Emisión, Emission, Emissione, Emissão, Emission, Ausgabe OGC 13% O2	**132 mg/Nm³**
Emisión, Emission, Emissione, Emissão, Emission, Ausgabe PM 13% O2	**29 mg/Nm³**
Desprendimiento de sustancias peligrosas, Rejet de substances dangereuses, Rilascio di sostanze pericolose, Release of hazardous substances, Lançamento de substâncias perigosas, Freisetzung von Gefahrstoffen	**Cumple, Conforme, Conforme, Compliant, Em Conformidade, Gemäß**
Temperatura superficial, Température de surface, Temperatura superficiale, Surface temperatura, Temperatura superficial, Oberflächentemperatur	**Cumple, Conforme, Conforme, Compliant, Em Conformidade, Gemäß**
Seguridad eléctrica, Sécurité électrique, Sicurezza elettrica, Electrical safety, Segurança elétrica, elektrische Sicherheit	-
Resistencia mecánica (para soportar una chimenea/un conducto de humos), Resistanse mécanique (pour souvenir la cheminée), Resistenza mecánica (per supportare il camino), Mechanical strength (to support the fireplace), Resistência mecânica (para suportar a chaminé), Mechanischer Widerstand (zur Unterstützung eines Schornsteins/Abzugs)	**Cumple, Conforme, Conforme, Compliant, Em Conformidade, Gemäß**
Potencia térmica ambiente, Puissance rendue au milieu, Potenza resa all'ambiente, Power output to the environment, Potência libertada no ambiente, Umgebungswärmeleistung	**13 kW**
Potencia térmica agua, Puissance rendue à l'eau, Potenza ceduta all'acqua, Power transferred to wáter, Potência cedida à agua, Thermalkraft Wasser	-
Rendimiento energético, Rendement, Rendimento, Efficiency, Atuação, Energieeffizienz	**83 %**

Siga las instrucciones para el usuario. Suivez les instructions de l'utilisateur. Segui le istruzioni per l'utente. Follow the user instructions. Siga as instruções do usuário. Befolgen Sie die Benutzeranweisungen

LACUNZA KALOR GROUP S.A.L
Pol. Ind. Ibarrea 5A
31800 Alsasua (Navarra) Spain
Tel.: (00 34) 948 56 35 11
Fax.: (00 34) 948 56 35 05
e-mail: comercial@lacunza.net
Website: www.lacunza.net
EDITION: 03